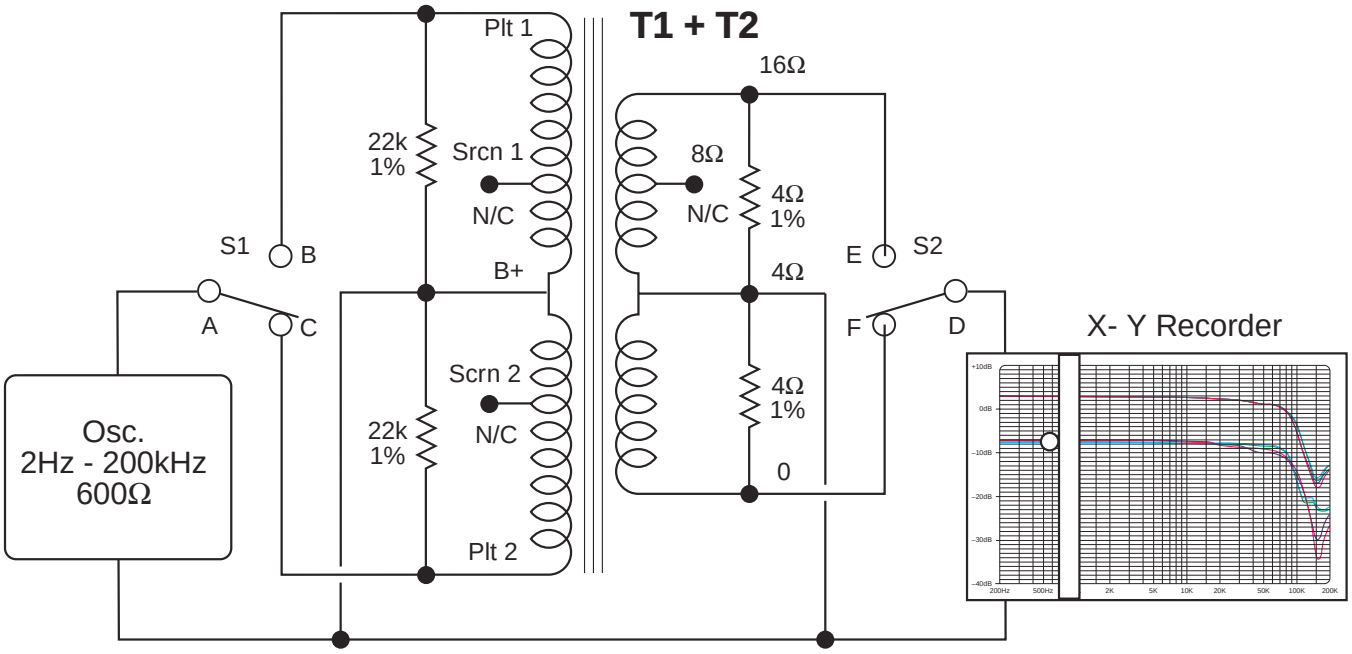
T1 + T2
Plt 1
16Ω
22k
1%
Srcn 1
8Ω
N/C
4Ω
1%
N/C
S1
B
E
S2
B+
4Ω
A
C
F
D
X- Y Recorder
Scrn 2
Osc.
2Hz - 200kHz
600Ω
22k
1%
N/C
4Ω
1%
0
Plt 2

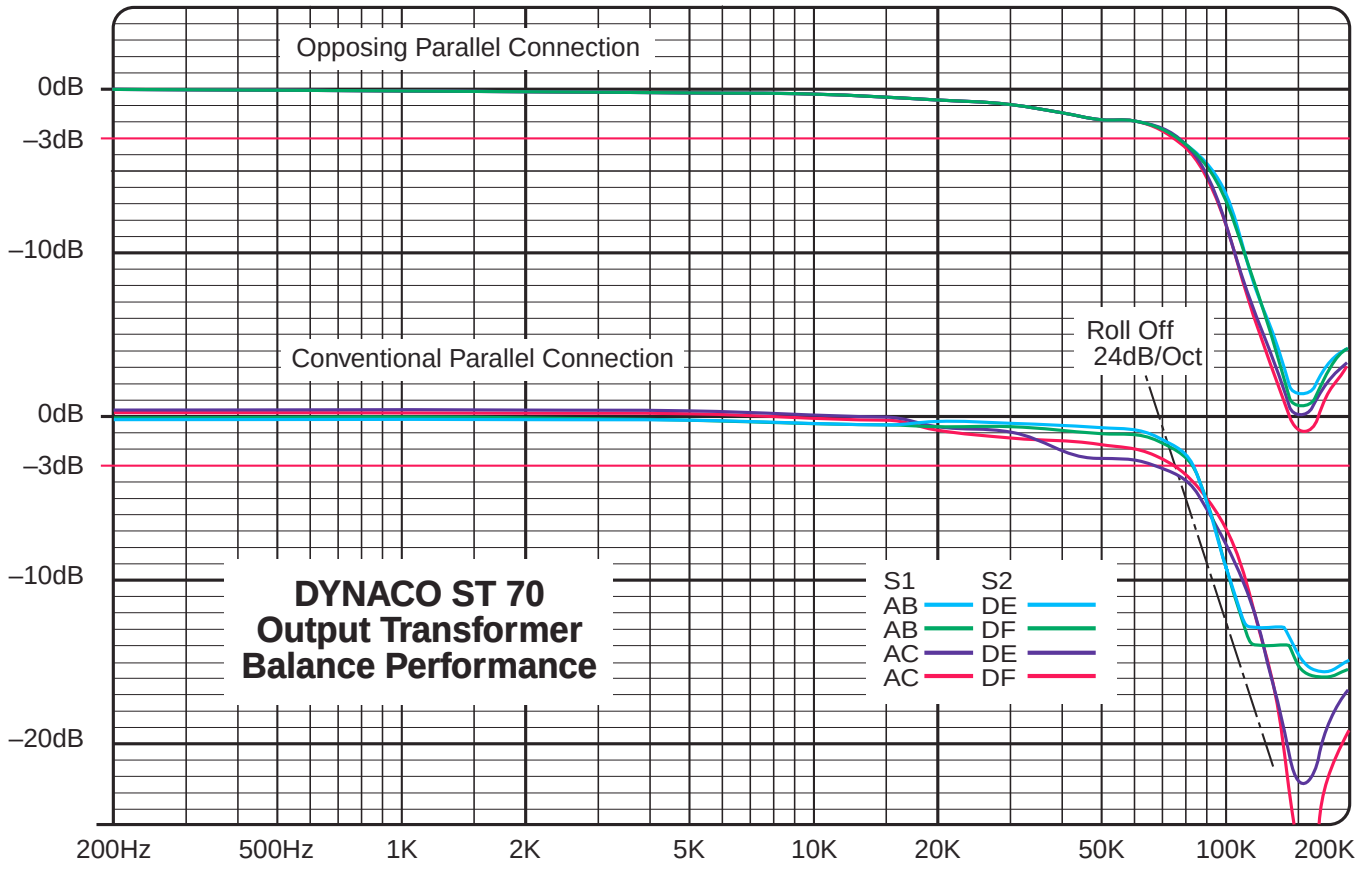
Opposing Parallel Connection
0dB
–3dB
–10dB
Conventional Parallel Connection
Roll Off
24dB/Oct
0dB
–3dB
–10dB
–20dB
DYNACO ST 70
Output Transformer
Balance Performance
S1 S2
AB DE
AB DF
AC DE
AC DF
200Hz
500Hz
1K
2K
5K
10K
20K
50K
100K
200K